hush. acoustics

Shaped Wall Tile

Diamond

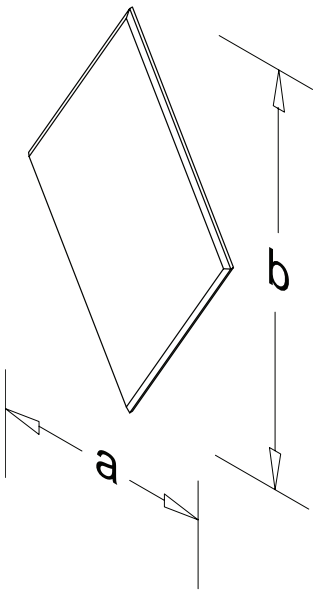

a = 300 b = 520

All measurements shown in mm

* Custom sizes available upon request

Quiet by design

Overview

Hush wall tiles are a simple and effective way to draw attention to an area of a room with their creative shapes and designs whilst taking control of the unwanted echoes.

Hush acoustic panel is manufactured from 100% PET(60% recycled material), comprising of flame-retardant fiber as new material to ensure ASTM E84 class A certification. 'Hush' Panels contain no VOC' (Sept 2018) and has a 'Sound absorption Coefficient: NRC = 0.65 [ASTM C423-17]. The high strength of PET panels in comparison to its weight is the key to its superior energy efficiency.

Specifications

- 9mm Material Thickness
- 0.65 NRC rating
- 5mm Bevel Depth, 45° Bevel Angle

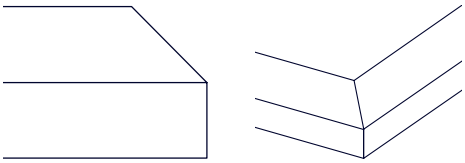

Colour Options

Element Colurs:

Sunflower Apricot Wine Slate Fog

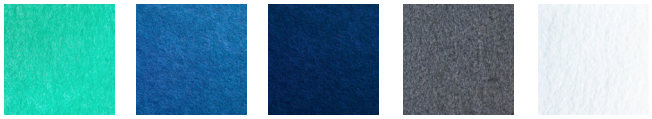

Aqua Ocean Lapis Oyster Snow

Moss Lilac Mocha Casper Vanilla

Given our dedication to sustainability and use of recycled resources, a slight color variation up to 5% could occur.

Also available in our new colour series, that showcases an innovative assortment of 50 specially developed surface shades:

Installation Methods

Option 1: Construction adhesive

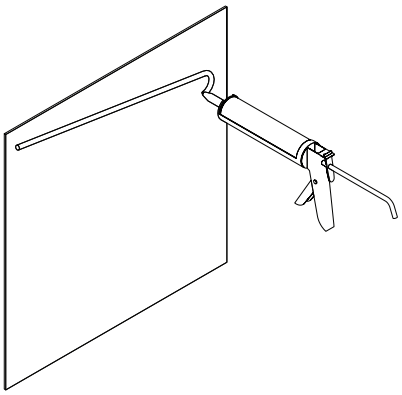

Option 2: Magnetic fixing

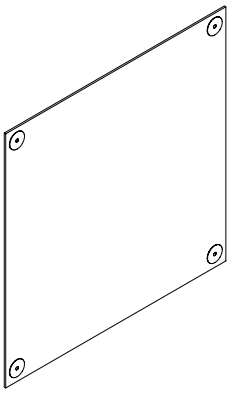

Flame Spread Test & NRC

Determine the Flame Spread and Smoke Developed Values based upon triplicate tests conducted.

Insulation material, 9mm in thickness, described as, “9mm polyester acoustic sheet”.

Method

The method, designated as CAN/ULC-S102-10, Standard Method of Test for Surface Burning Characteristics of Building Materials and As- semblies”, is designed to determine the relative surface burning characteristics of materials under specific test conditions. Results of less than three identical specimens are expressed in terms of Flame Spread Value (FSV) and Smoke Developed Value (SDV). Results of three or more replicate tests on identical samples produce average values expressed as Flame Spread Rating (FSR) and Smoke Developed Classification (SDC).

Test Procedure

The tunnel is preheated to 85°C, as measured by the backwall-embedded thermocouple located 7090mm downstream of the burner ports, and allowed to cool to 40°C, as measured by the backwall-embedded thermocouple located 4000mm from the burners. At this time the tunnel lid is raised and the test sample is placed along the ledges of the tunnel so as to form a continuous ceiling 7315mm long, 305mm above the floor. The lid is then lowered into place. Smoke Developed Values (SDV) are determined by comparing the area under the obscuration curve for each test sample to that of inorganic reinforced cement board and red oak, established as 0 and 100, respectively. Each Smoke Developed Value is determined by dividing the total area under the obscuration curve by that of red oak and multiplying by 100.

Observations of Burning Characteristics

The specimens ignited approximately 18 to 23 seconds after exposure to the test flame. Melting and flaming dripping behavior was observed. Material that dripped to the floor of the apparatus also ignited.

- The flame fronts propagated to maximum distances of 1.7, 2.9, and 1.8 meters at approximately 587, 577 and 244 seconds in to each respective test.
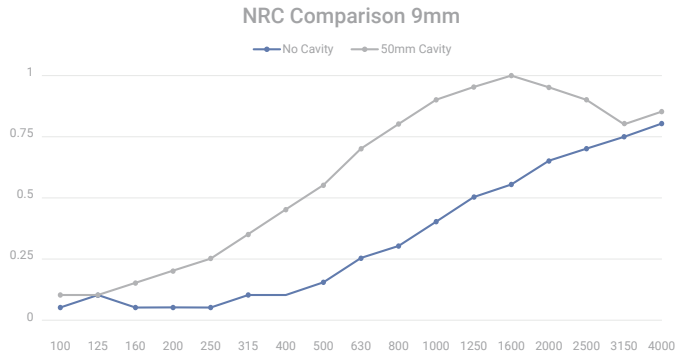
Noise Reduction Coefficient Comparison